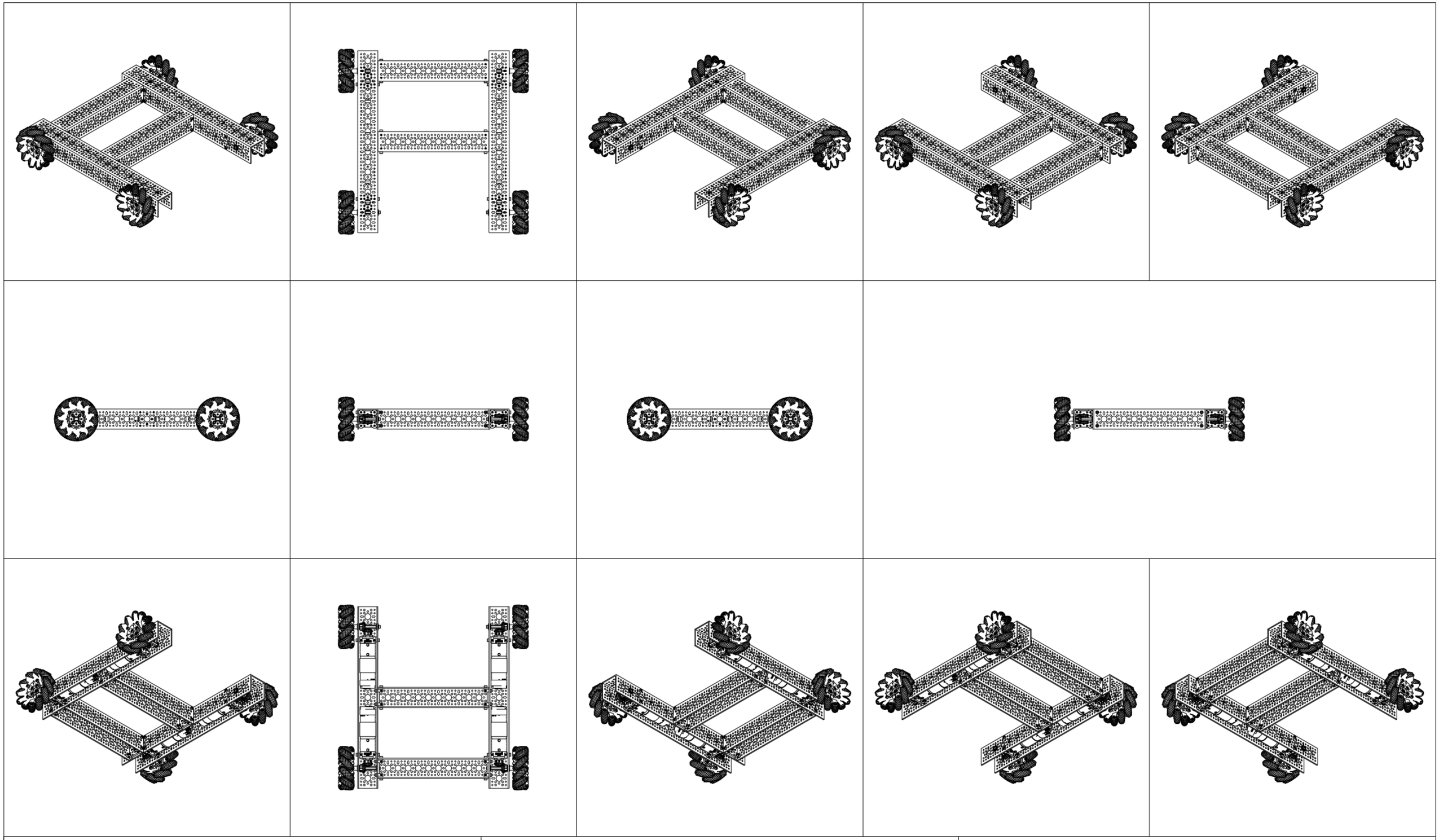

Product SKU	Product Version	Product Weight
3209-0001-0007	v7.0	4269g (9.41lbs) Assembled